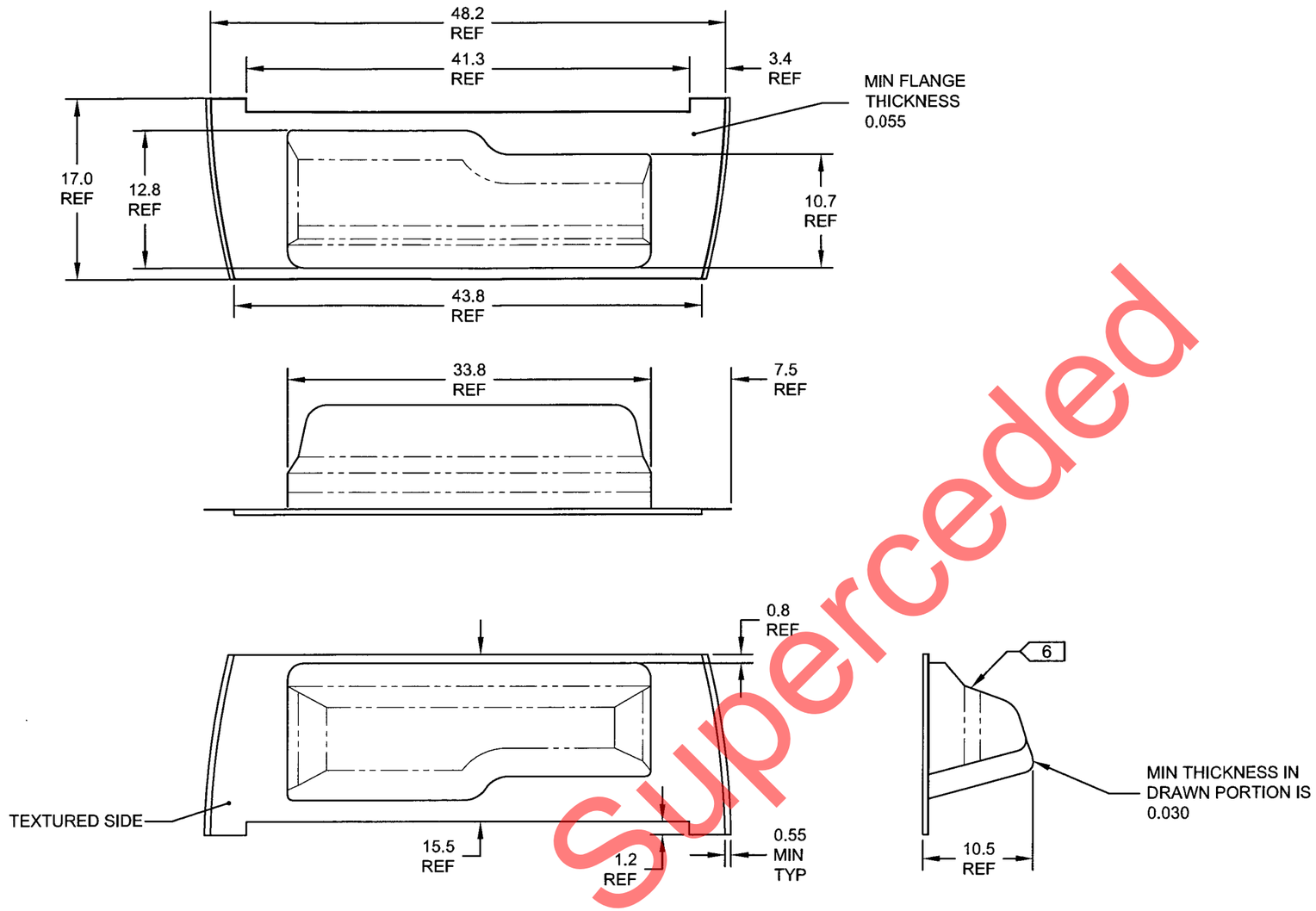

D3850-1 HAT BIN
(BELL 206 L3/L4)

Superceded

UNDER REVIEW
CHG MAT'L TO 0.125"
PH 09.02.05

RELEASED
09/01/12 NAP

NOTES:
1) MATERIAL: KYDEX 6185, 0.080 THICK, P3-VELOUR MATTE, IVORY #62015
(REF DART SPEC MKYD6185S.080-P3-62015)
2) FINISH: NONE
3) TOLERANCES: PER DART QSI 018 UNLESS OTHERWISE NOTED
4) UNITS: INCHES UNLESS OTHERWISE NOTED
5) BREAK SHARP EDGES: 0.005 TO 0.010 MAX
6) IDENTIFICATION: IDENTIFY WITH DART P/N "D3850-1" USING VIBRATING STYLUS
7) WEIGHT: 2.9 lbs
8) TOOLING: THERMOFORM PER MOLD DT9338 PER DART QSI 022. TRIM PER MOLD

REV.	DESCRIPTION	BY	DATE
A	NEW ISSUE	PH	08.10.20

DESIGN	PH	**DART AEROSPACE LTD** HAWKESBURY, ONTARIO, CANADA
DRAWN	PH	
CHECKED		DRAWING NO. D3850 — REV. A — SHEET 1 OF 1
MFG. APPR.		
APPROVED		TITLE HAT BIN (BELL 206 L3/L4) — SCALE NTS
DE APPR.		
DATE	08.10.20	

COPYRIGHT © 2008 BY DART AEROSPACE LTD
THIS DOCUMENT IS PRIVATE AND CONFIDENTIAL AND IS SUPPLIED ON THE EXPRESS CONDITION THAT IT IS NOT TO BE USED FOR ANY PURPOSE OR COPIED OR COMMUNICATED TO ANY OTHER PERSON WITHOUT WRITTEN PERMISSION FROM DART AEROSPACE LTD.